Manchester - England

CORA Series Rigging Manual

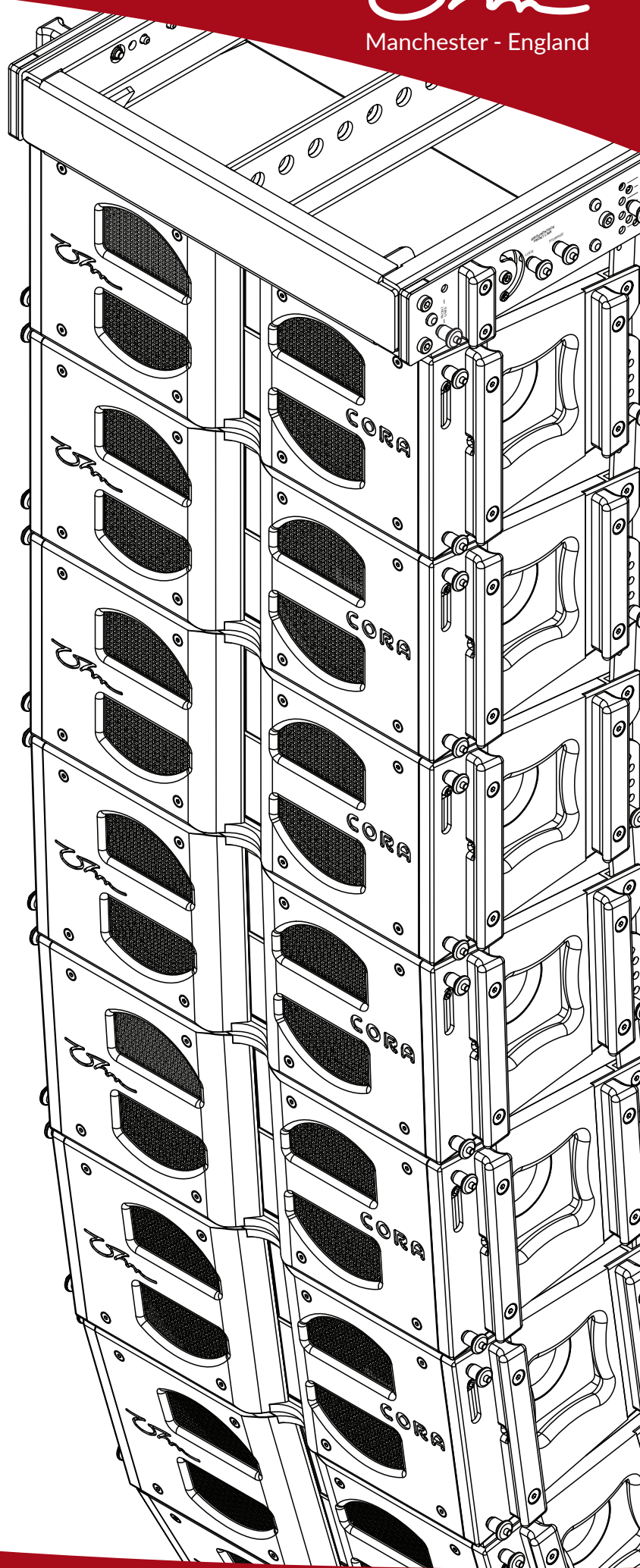

Version 7.0 01/02/2019

Manchester - England

Contents

1. Introduction to CORA **3**

2. Safety **4**
- 2.1. General safety 4
- 2.2. Load capacity 4
- 2.3. Wind load 4
- 2.4. Operation 5
- 2.5. pro-A-sync simulation software 5

3. CORA Array Frame **6**
- 3.1. Introduction 6
- 3.2. Array frame hardware 7
- 3.3. Suspension of the array frame 8
- 3.4. Single pickpoint operation 9
- 3.5. Dual pickpoint operation 10
- 3.6. Secondary safety points 11
- 3.7. Cable pick 11

4. CORA Array setup **12**
- 4.1. Preparation 12
- 4.2. CORA array rigging mechanism 13
- 4.3. Flown arrays 15
- 4.4. CORA/CORA active 16
- 4.5. CORA-S 18
- 4.6. Flying a mixed CORA array 20
- 4.7. Ground stacking the CORA array 21
- 4.8. CORA flightcases 23

5. Safety Checks **24**
- 5.1. Mechanical safety 24
- 5.2. System wiring 24
- 5.3. Signal test 24

6. Flying the Array **25**
- 6.1. Hoisting the array 25
- 6.2. Making safe at height 25

7. Derigging the Array **25**
- 7.1. General Information 25
- 7.2. Flightcasing the array 25

8. Care and Maintenance **26**
- 8.1. Visual inspection 26
- 8.2. Transportation 26

9. Technical Specifications **27**
- 9.1. CORA array 27
- 9.2. CORA-A array 29
- 9.3. CORA-S 31

10. Manufacturers declaration **33**

1. Introduction to CORA

CORA is a high power lightweight compact line array for use in medium throw applications. With a dispersion of 100° x 12° and up to 100° x 90° in an array configuration of 9 boxes, it is capable of 158 dB peak SPL. CORA hardware and its associated components should only be used in conjunction with Ohm CORA line array and CORA-S subwoofer loudspeakers as described in this manual.

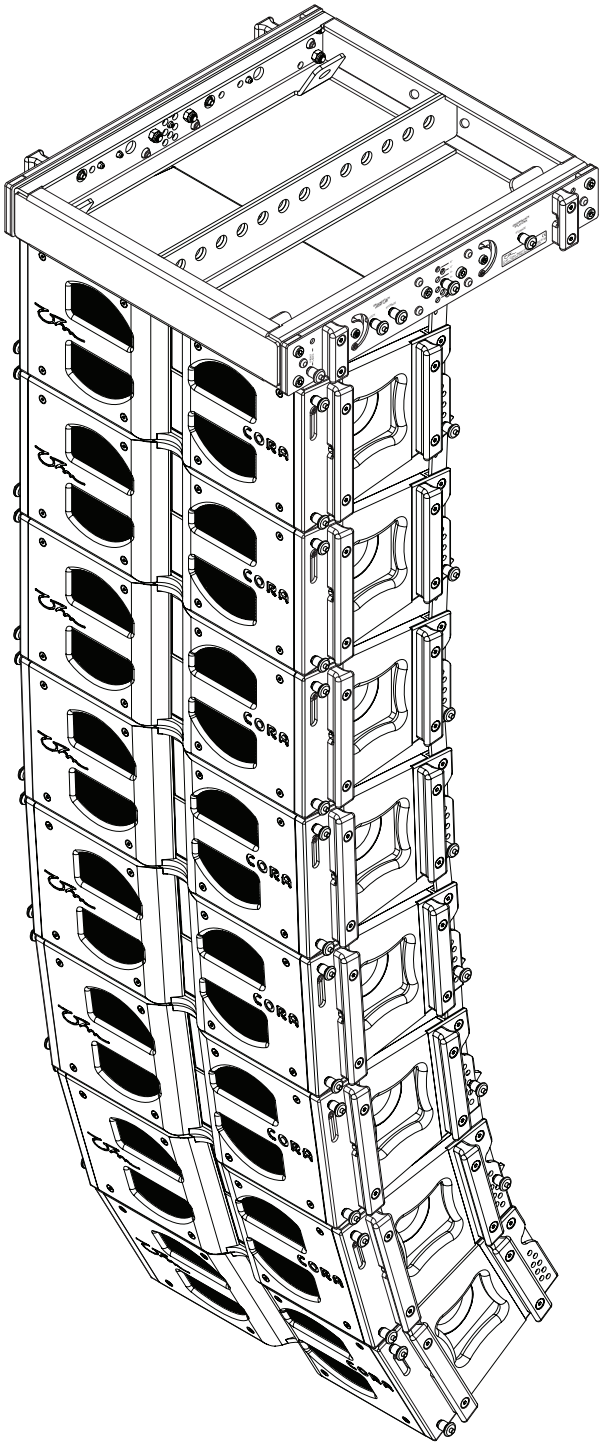

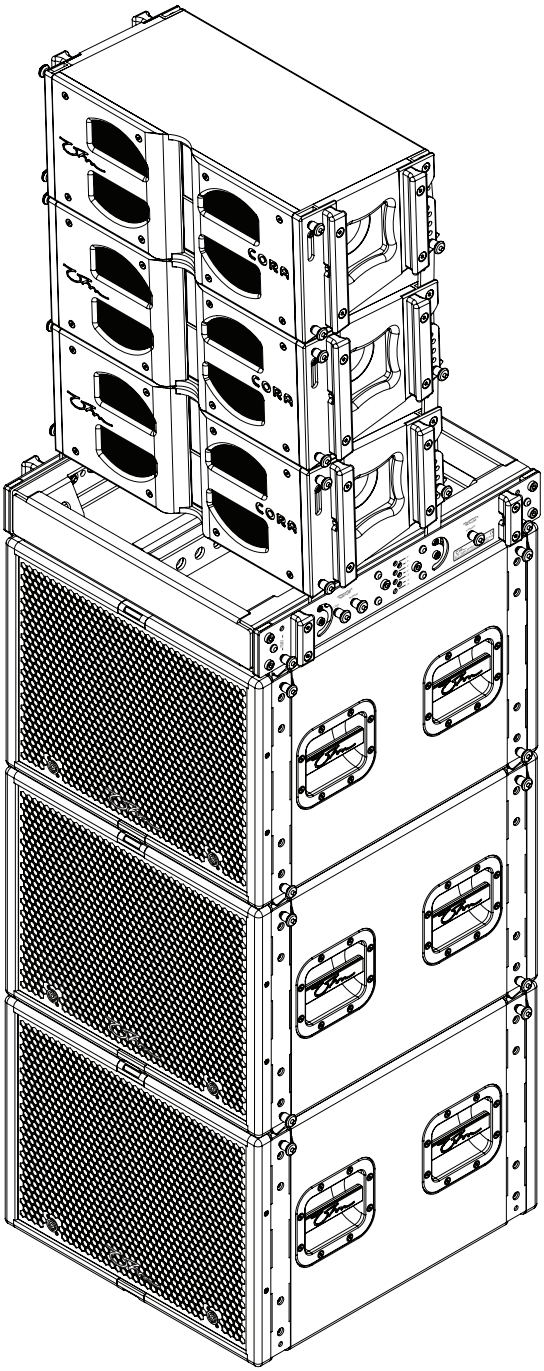

2. Safety

2.1. General Safety

Installation and setup of CORA arrays should be carried out by an Ohm qualified technician.

The technician responsible should ensure that all flying points and suspensions are suitable for their intended use and pass rigging inspection and safety tests.

All equipment should be inspected for quality before use. If any of the CORA loudspeakers or associated rigging appear faulty please withdraw these from use and contact Ohm for repair.

2.2. Load Capacity

The C-AF (CORA array frame) is designed to suspend a maximum total load of…

- 8 x CORA-S: 333.40 kg (including flying frame but no cabling)

Or…

- 12 x CORA array: 283.80 kg (including flying frame but no cabling)

Or…

- 2 x CORA-S and 8 x CORA array: 266.40 kg (including flying frame but no cabling)

2.3. Wind Load



WARNING!

Potential risk of personal injury and material damage!

Flying loudspeakers outside in wind conditions higher than 6 ft (22-27 knots, 39-49 km/h, 25-31 mph) is not recommended. If the wind force exceeds this lower and secure the array.

2.4. Operation

CORA array should always be assembled using 2 people, one on either side of the array.

During assembly pay attention to the risk of crushing hands and fingers in between cabinets.

Ensure all array pins are seated correctly when building the array.

When arrays are being hoisted under no circumstances stand underneath the array or in the vicinity of the load.

Do not climb on the array.

Wear suitable PPE.









2.5. pro-A-sync Simulation Software

Ohm line arrays must be designed using Ohm's pro-A-sync simulation software. For optimal alignment, deployment and safety we recommend all users attend one of Ohm's regularly hosted line array training seminars. Details of Ohm's training seminars can be found on the Ohm website at www.ohm.co.uk

pro-A-sync software is available as a standalone software package for both macOS and Windows based operating systems. Download from: www.ohm.co.uk/downloads/



3. CORA Array Frame

3.1. Introduction

The CORA array frame (C-AF) is designed to suspend or ground stack arrays consisting of:

CORA line array:
CORA-A active line array:
CORA-S:
A mix of CORA-S and CORA/CORA-A line array.

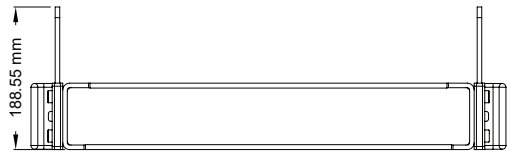

Front view groundstack links in the up position

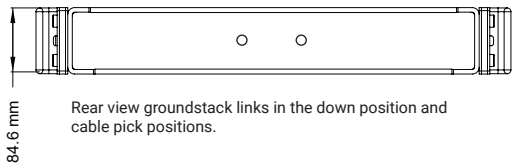

Rear view groundstack links in the down position and cable pick positions.

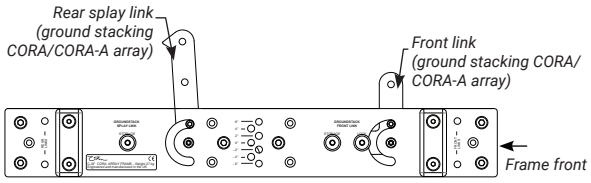

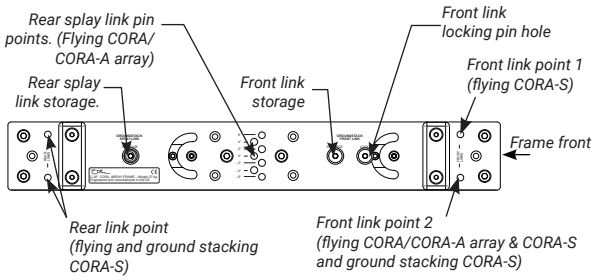

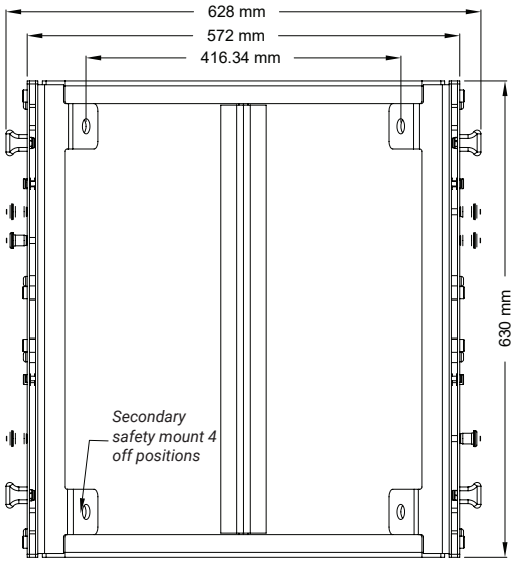

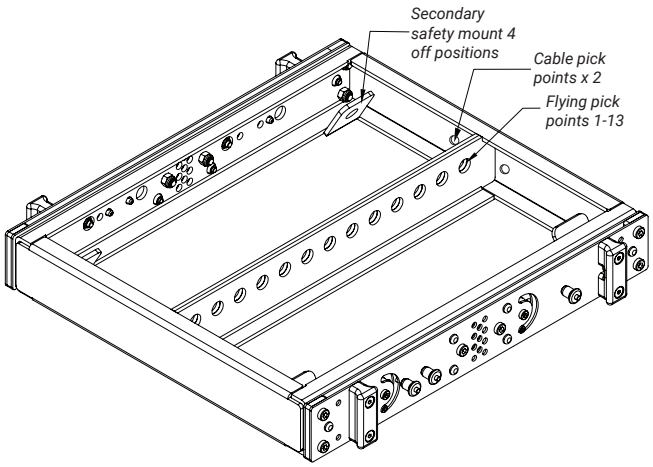

CORA array frame (C-AF)

3.2. Array Frame Hardware

The array frame is equipped with all the necessary attachments to allow flying or ground stacking of CORA/CORA-A. No additional hardware is required to build flown array hangs of either CORA/CORA-A or CORA-S.

On either side of the frame a front link and a splay link are built into the frame for ease of ground stacking. These links rotate from within the frame and can be locked in place using the locking pin attached to each side of the frame. When flying the array the links remain inside the frame and locked in the storage holes using the same locking pins.

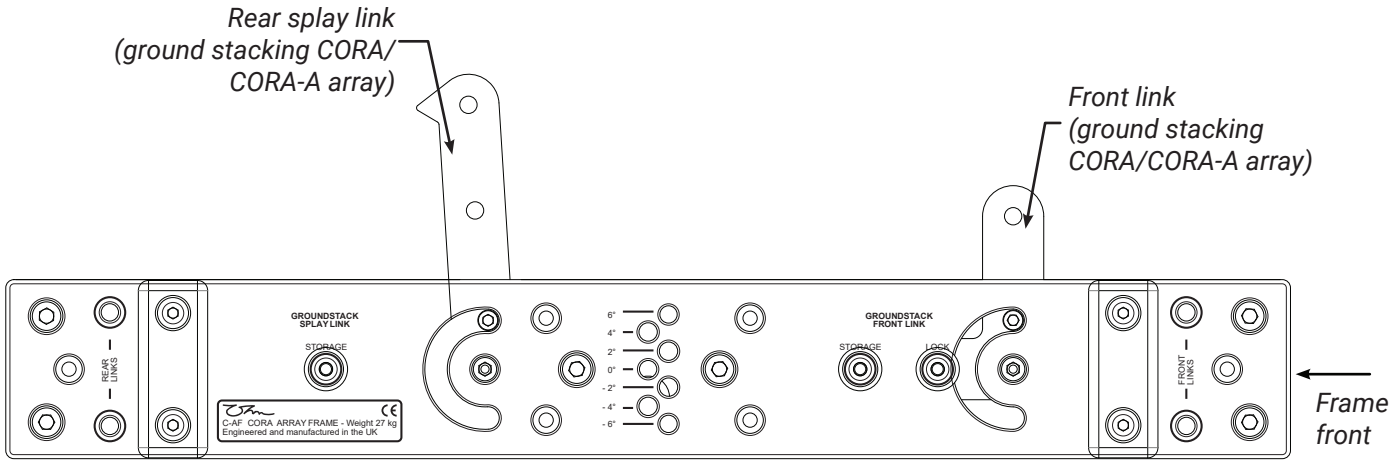

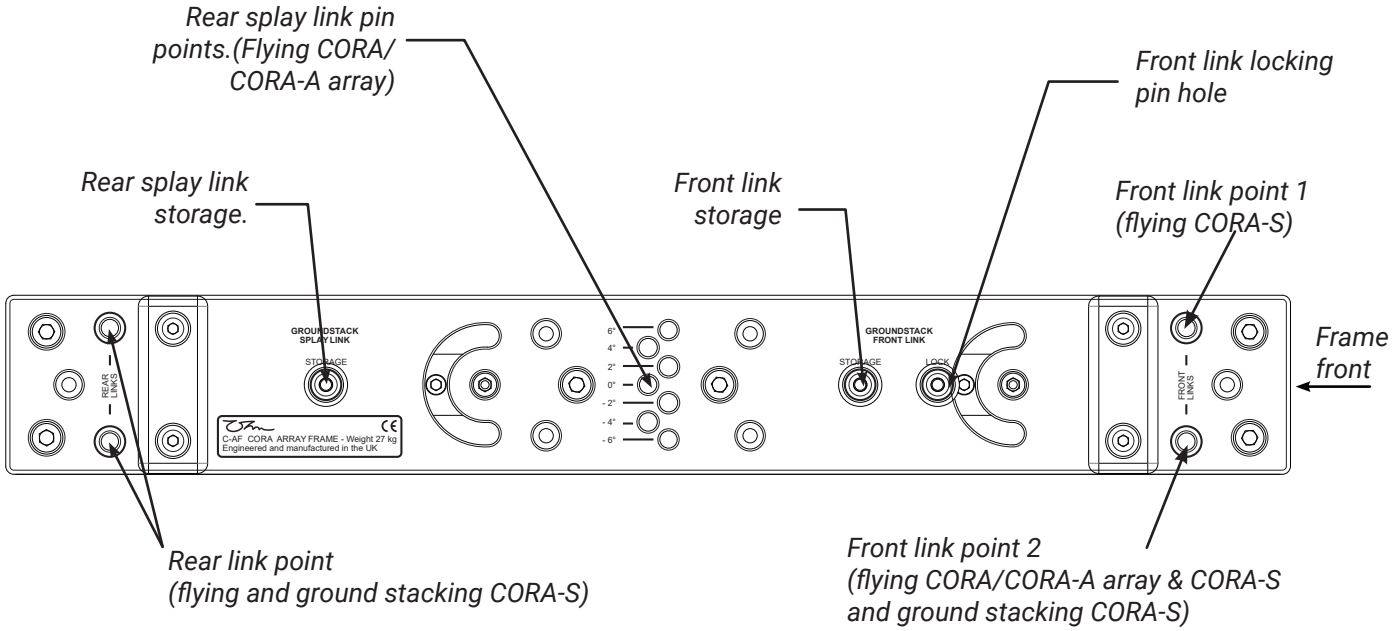

3.3. Suspension of the Array Frame

The Flying Frame has a central bar complete with 13 pickpoint holes.
The pickpoint required will depend on the load, angle and deployment of the array in question (single or dual pickpoint operation). To determine the correct pickpoint it is recommended to use Ohm's pro-A-sync simulation software. Failure to do so could result in a flown array that is not safe, incorrectly aligned for the venue or space you are working in, or acoustically incoherent.

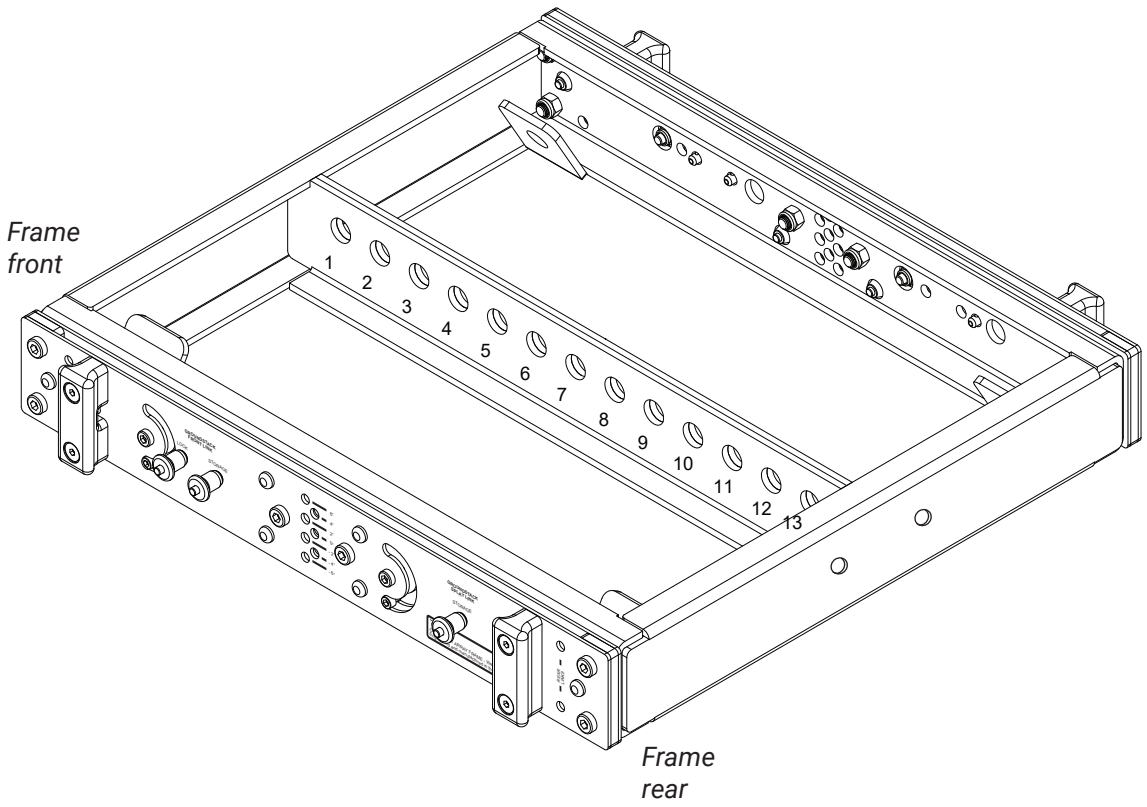

C-AF showing 13 pickpoint positions

3.4. Single Pickpoint Operation

When using a 'single pickpoint' the position of the pickpoint is determined by using Ohm's pro-A-sync simulation software. A one tonne shackle must be used in conjunction with a half metre wire sling to ensure that the chain bag of the hoist being used does not foul on the top of the array frame.

The target angle of the array is achieved when the array is fully hoisted as intended.

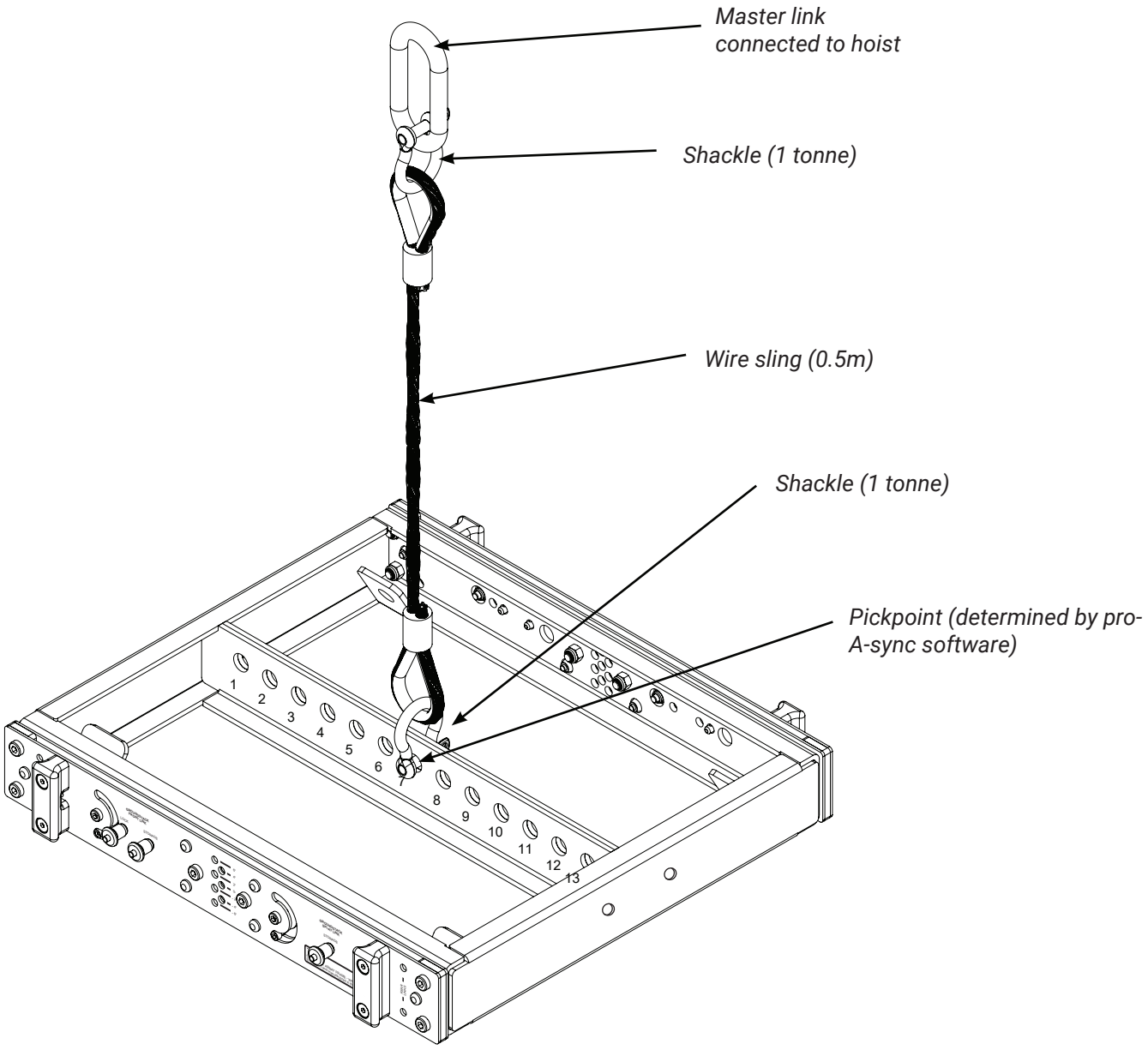

C-AF showing single pick point using pickpoint 7.

3.5. Dual Pickpoint Operation

With 'dual pickpoint' operation, the vertical alignment of the array is determined by trimming the hoist motors after the array has been fully assembled and lifted to it's operating trim height.

Pickpoint hole 1 and 13 are used in dual pickpoint operation and the angle of the array calculated using Ohm pro-A-sync. For optimum array vertical alignment an inclinometer should be attached to the frame and the measuring device operated from floor level.

Two shackles (one tonne) must be used in conjunction with wire slings (0.5m) to ensure that the chain bags of the hoists being used do not foul on the array frame. Additional weight on the array frame can adjust the array's angle and overall weight so careful deployment is essential.

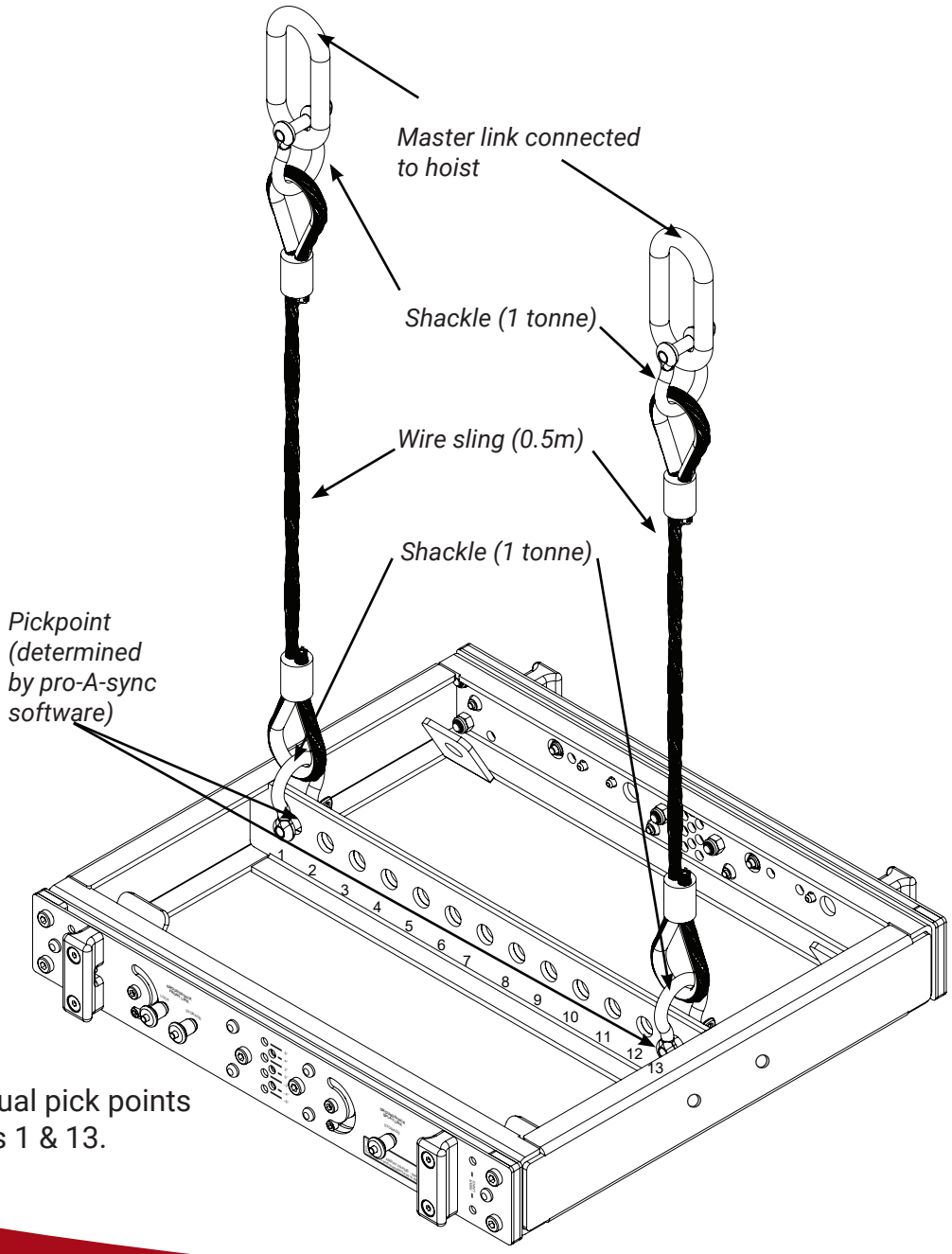

C-AF showing dual pick points using pickpoints 1 & 13.

3.6. Secondary Safety

Four x 45° steel tabs at the front and back corners of the array frame allow for a secondary point of safety. The secondary rigging point should be independent of the main rigging point and must be capable of supporting the entire load.

From each safety point on the frame one tonne shackles must be used attached to wire slings to form an equilateral triangle maintaining the maximum sling angle of 60°. A further two shackles must be used on the other end of the wire slings and then attached to a load ring, and from there to the secondary safety point in the venue or tower that the array is suspended from.

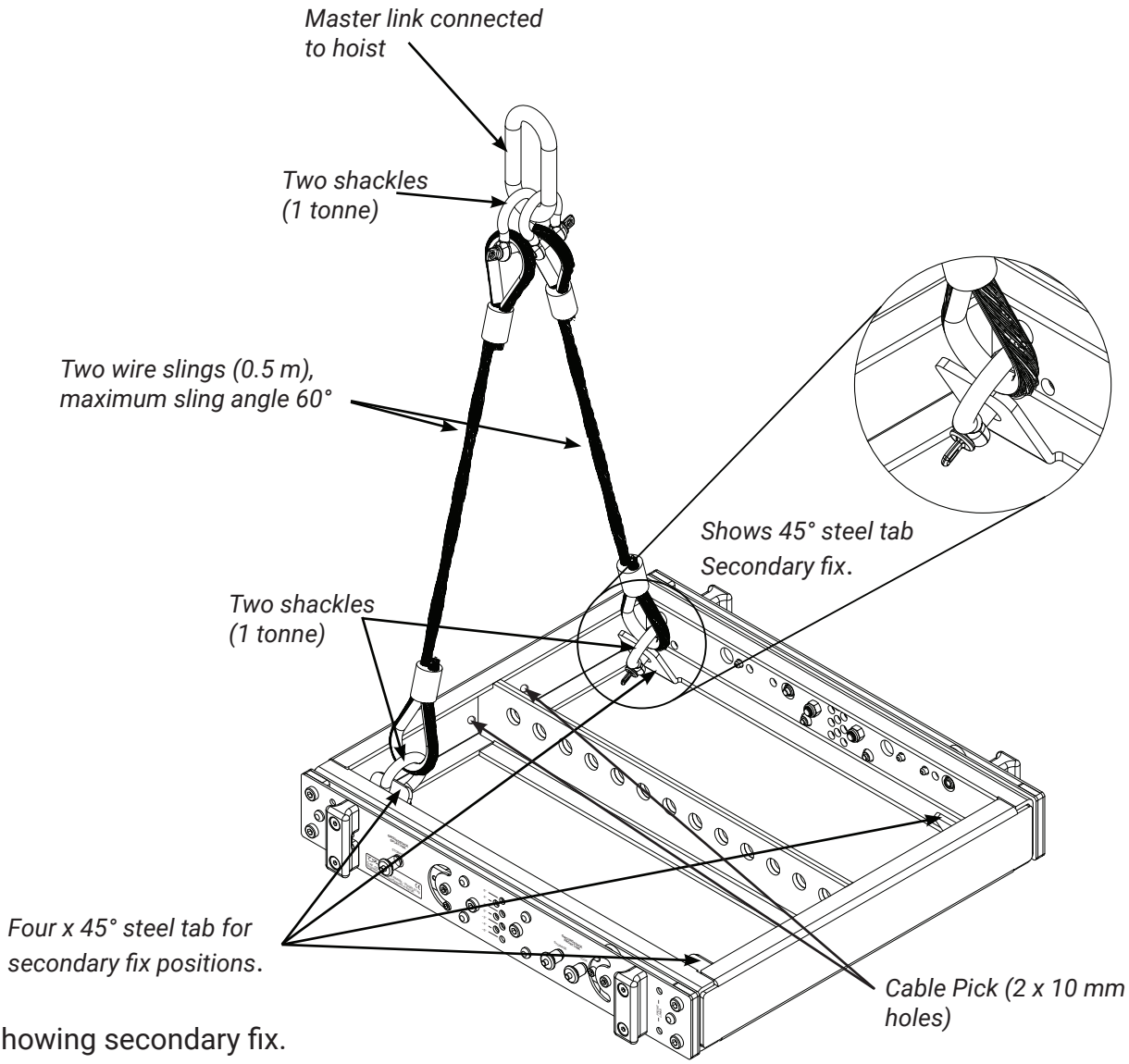

C-AF showing secondary fix.

3.7. Cable Pick

On the rear of the frame 2 x 10 mm holes are positioned for use with 10 mm eyebolts as cable picks. When flying CORA-S these can be utilised for cable strain relief. When flying CORA/CORA-A array the motor point should be used for strain relief so that the arrays angle is not compromised.

4. CORA Array Setup

4.1. Preparation

Before you fly or ground stack the array you must design the array using Ohm's pro-A-sync simulation software. This ensures correct acoustical and mechanical deployment of the array.

PDF's can be generated from within the software and printouts made to assist the riggers with the suspension points, chain hoists and pick/pin points.

Inspection before setup:

Clear the working area before setting up and lifting the array.

Check the condition of the chain hoists, their positions and ensure chains are not twisted.

Visually inspect all the loudspeaker cabinets and their associated rigging. Any damaged components must be withdrawn from use immediately.

4.2. CORA Array Rigging Mechanism

CORA/CORA-A Array

The front top links are located within the cabinet side cheeks. By factory default the front links are in the storage position. Once the pins are removed the links can be pushed upwards and the pins replaced in the top holes allowing a cabinet above to be attached.

The pin holes on the bottom of the cabinet at the front are for connecting front links from cabinets below.

The splay links on the rear of the cabinet at the top by default are in the storage position. Removal of the pins here allows the splay links to rotate upwards to be connected to the correct alignment hole in the cabinet above according to Ohm's pro-A-sync software.

On the bottom of the cabinet in the rear the pin holes are for connecting the splay links from the cabinet below.

Factory default link positions

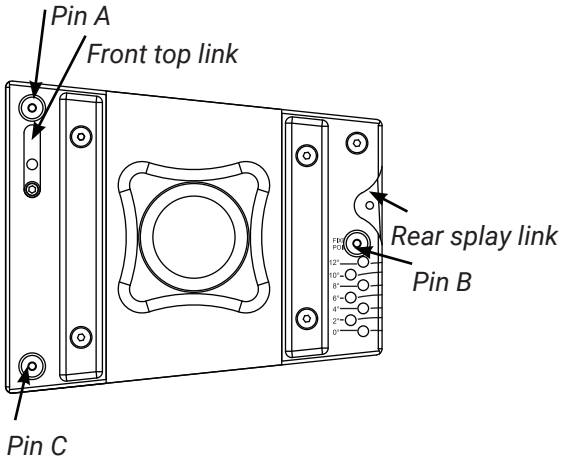

Remove pin A from the front top link. Slide the link upwards and replace the pin.

Remove pin B from the rear splay link, This allows the rear splay link to rotate out ready to be located in either the frame or the cabinet.

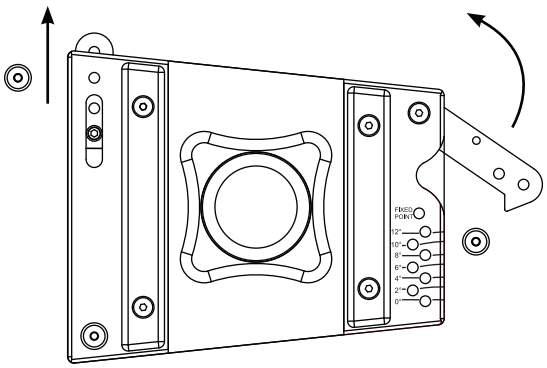

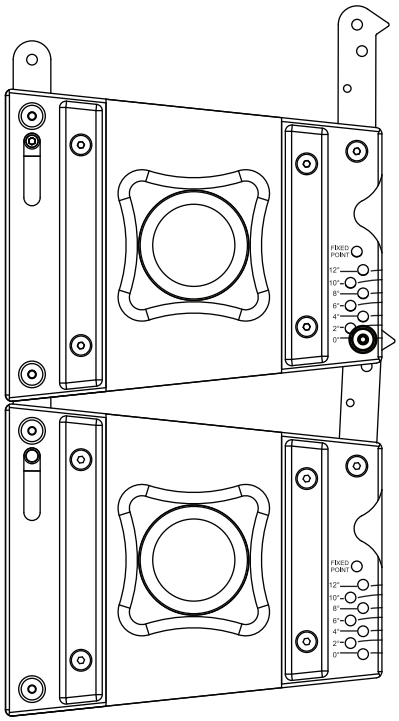

Further instructions of this procedure are on page (16)

CORA-S

CORA-S utilises separate steel sub links to connect the subwoofer to the array frame or one CORA-S to another CORA-S. Inserting a steel sub link in each corner of the subwoofer allows the connection of the frame on the top or bottom of the cabinet. For mixed arrays of CORA/CORA-A array and CORA-S, two array frames must be used where CORA/CORA-A array cabinets are flown beneath CORA-S. CORA-S must only be deployed at the top of the array and should not be used within clusters of CORA/ CORA-A array loudspeakers in one array hang.

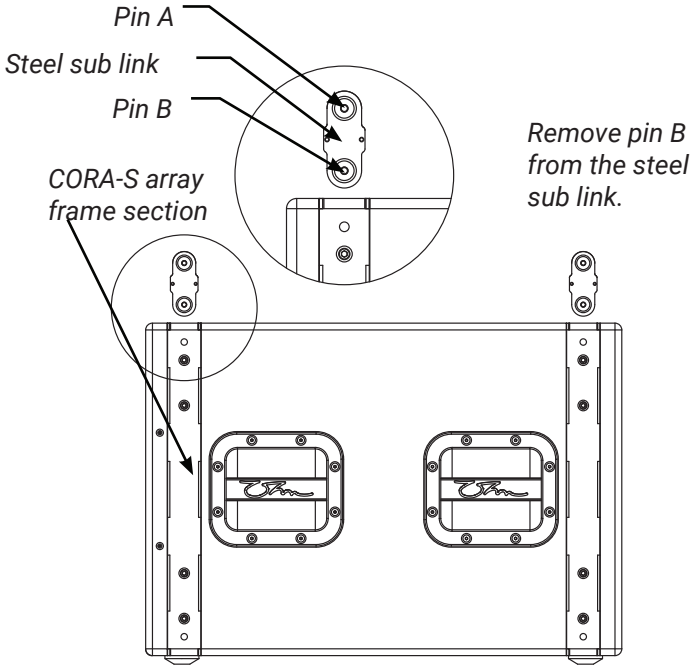

1

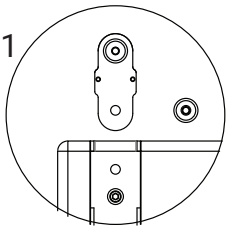

Remove pin B from the steel sub link. Locate the steel sub link over the top of CORA-S array frame section

2

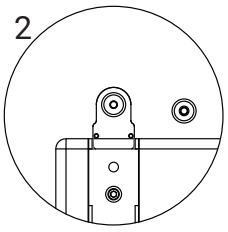

Place steel sub link into the CORA array frame section lining up the holes.

3

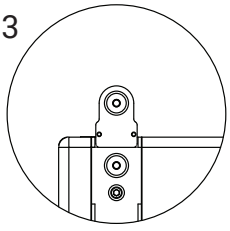

Replace pin B into the hole on the CORA array frame section and through the steel sub link.

Repeat procedure above on all four corners of the CORA-S, the sub is now ready to connect to the array frame or other CORA-S as per instructions on page (18)

4.3. Flown Arrays

Flown arrays are suspended using the C-AF (CORA Array Frame)

Once you have chosen the correct type of suspension for your application (single or dual pickpoint) attach the rigging to the frame (as described in chapter 3.4. – 3.5. single/dual pickpoint).

At this point it is recommended that you attach a secondary safety device to the frame before attaching any cabinets (as described in chapter 3.6. Secondary Safety).

Prepare the correct amount of cables and link cables according to the system setup (number of cabinets and amplifiers used).

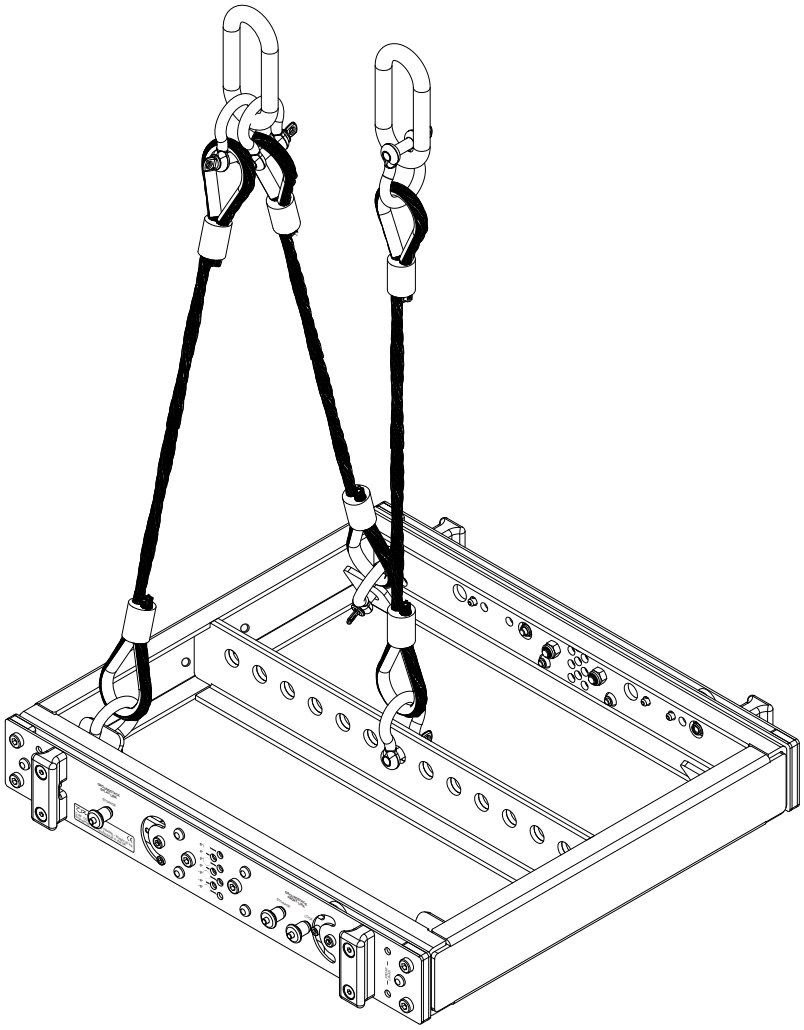

C-AF showing single hang point at pickpoint 7 with secondary safety.

4.4. CORA/CORA-A

CORA and CORA-A share the same physical size and rigging hardware.

Prepare the first cabinets rigging hardware (as described in chapter 4.2. CORA Array Rigging Mechanism). Lower the frame onto the cabinet until the front links line up with the flying link holes on the frame and insert the locking pins of the frame on each side. Using the data from Ohm's pro-A-sync software rotate up the rear splay links of the cabinet and align them with the correct pin points on the frame. Insert the locking pins on each side of the frame.

Add further cabinets using the same procedure as above. Raise the frame with the first cabinet attached and then lower onto the next cabinet and repeat the process. Connect the speaker lines (CORA) or power and signal (CORA-A) according to the number of amplifier channels and cabinets used.

Make sure to connect the cabling before the top of the array becomes out of reach. Use the cable pick on the frame to choke and suspend the cabling without putting any unwanted stress on the cabinets connectors.

Before hoisting the array to the desired trim height recheck the entire array including its locking pins, splay angles, power and signal/speaker cabling. (Refer to chapter 5. System safety checks).

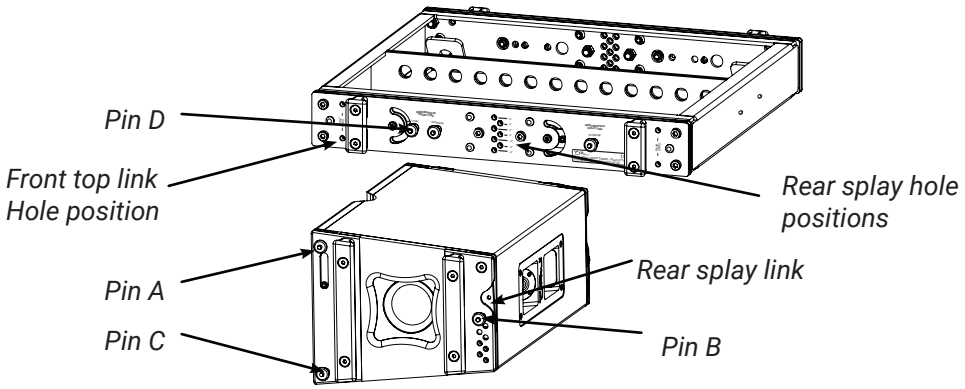

1

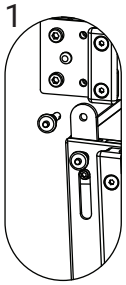

Once prepared lower the frame until the front top links of the cabinet are able to slide into position.

2

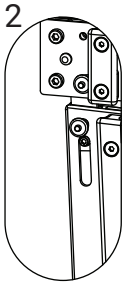

With the holes lined up lock in into place using pin D from the frame.

3

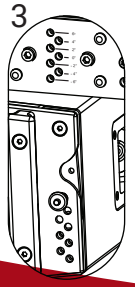

If not already done, remove pin B from rear splay link.

4

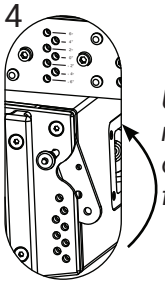

Using thumb hole on rear splay link rotate upwards ready to be positioned on the rear splay link holes on the frame.

5

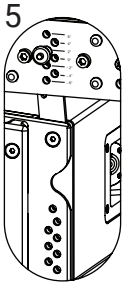

Once positioned in to the correct hole as predicted via the pro-A-sync software lock into place using pin B

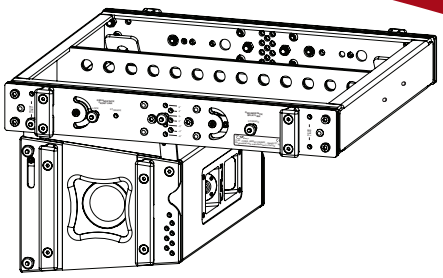

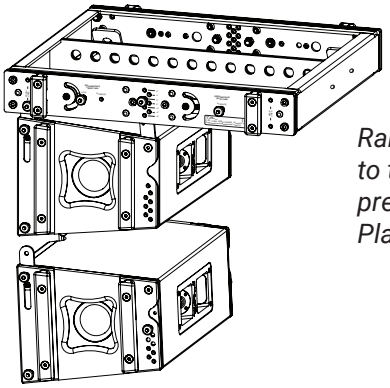

Raise the array ready to take the next prepared cabinet. Place cabinet below.

6

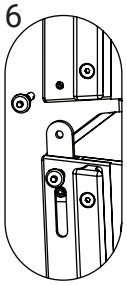

Remove pin C from top cabinet, lower the frame until the front top links of the lower cabinet are able to slide in to position on the higher cabinet.

7

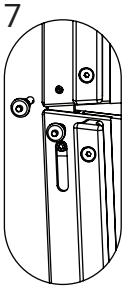

Push the front top link in to the slot on the bottom of the higher cabinet until the holes line up.

8

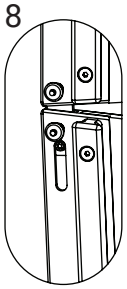

With the holes lined up lock in into place using pin C from the top cabinet.

9

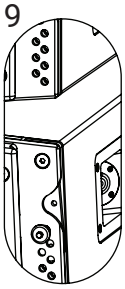

If not already done, remove pin B from rear splay link.

10

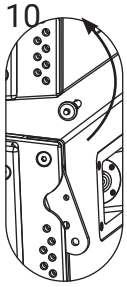

Using thumb hole on rear splay link rotate upwards and position on the rear splay link holes on the top cabinet.

11

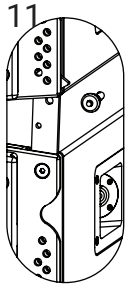

12

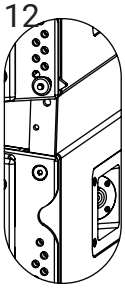

Once positioned in to the correct hole as predicted via the pro-A-sync software lock into place using pin B

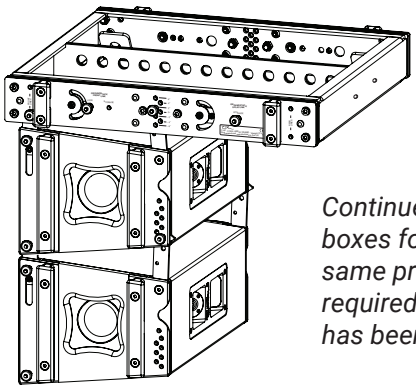

Continue to connect boxes following the same procedure until the required amount of array has been added.

4.5. CORA-S

Prepare the first cabinets rigging hardware (as described in chapter 4.2. CORA Array Rigging Mechanism). Lower the frame onto the cabinet until the front and rear sub steel links line up with the flying link holes on the frame and insert the locking pins from the cabinet on each side.

Add further cabinets using the same procedure as above. Raise the frame with the first cabinet attached and then lower onto the next cabinet and repeat the process. Connect the speaker lines according to the number of amplifier channels and cabinets used.

CORA-S shares the same symmetrical footprint whether the cabinet is front facing or rear facing. No adjustment to the cabinet rigging is required for mixed front facing/ rear facing set-ups. Cardioid sub arrangements can be deployed easily with this in mind. The cabinet is also fitted with speakON® connectors front and back for ease of cable management.

Before you start prepare the sub links and fit to the top of the CORA-S.

1

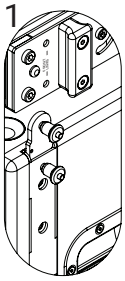

Lower the frame using the hoist over the first CORA-S.

2

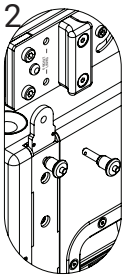

Remove the pins from the top of the sub links on the CORA-S if not already done so.

3

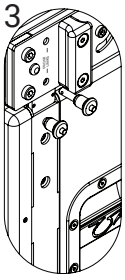

Lower the frame onto the sub links and line up the holes.

4

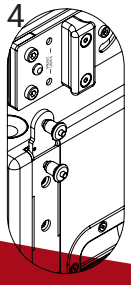

Once in position replace the pins through the frame and the sub links.

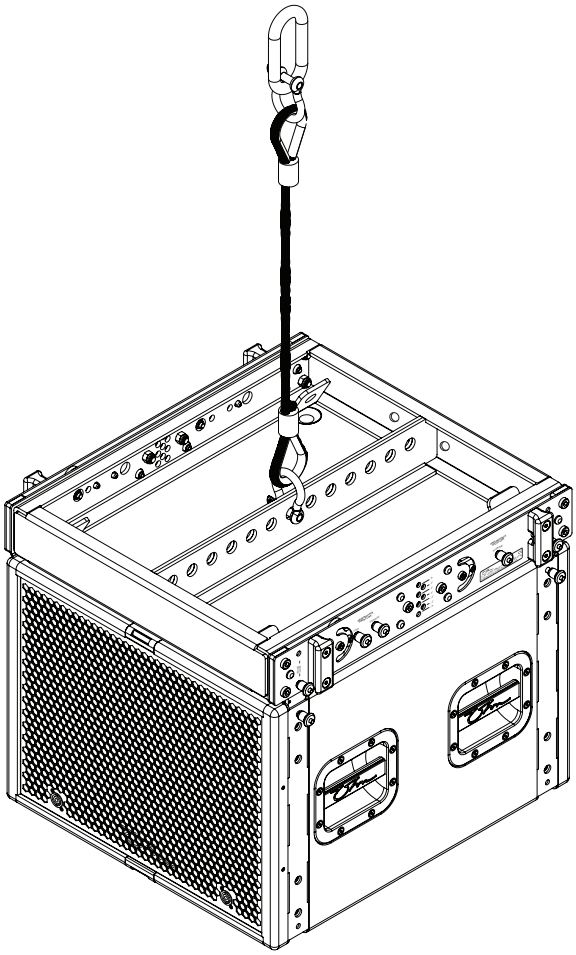

Add additional subs as follows

5

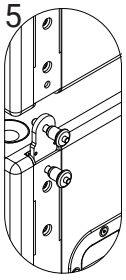

Position the frame and CORA-S using the hoist over the additional CORA-S.

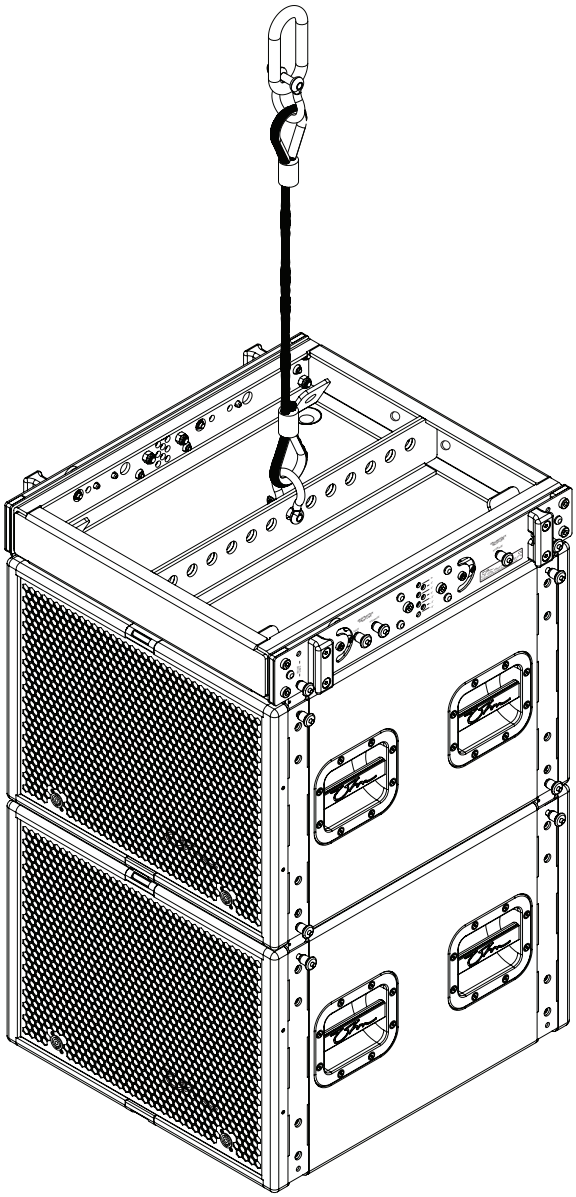

6

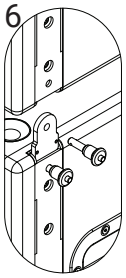

Remove the pins from the top of the sub links on the lower CORA-S if not already done so.

7

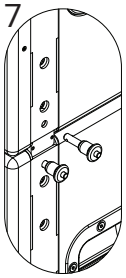

Lower the array onto the sub links and line up the holes.

8

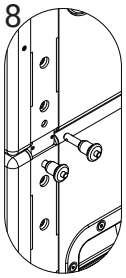

Once in position replace the pins through the CORA-S rigging and the sub links.

4.6. Flying a Mixed CORA Array

If CORA-S are to be flown in a mixed array these must always be positioned at the top of the array column.

For a mixed setup two flying frames are required, one frame is used for the suspension, the second frame is used beneath the subs to attach CORA/CORA-A array cabinets. Prepare all the cabinets rigging hardware (as described in chapter 3.7. CORA Array Rigging Mechanism). An additional set of four steel sub links will be required to attach the second frame beneath the lowest sub in the array.

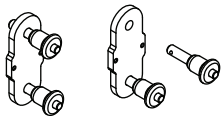

Prepare the four sub links by removing the top pin.

9

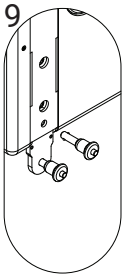

With the array in the air place the sub link into the CORA-S rigging frame.

10

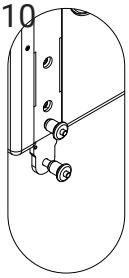

Replace the pins from the top of the sub links Through the CORA-S frame and the sub links securing them in place.

11

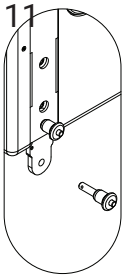

If not already done so remove the bottom pins from the sub link

12

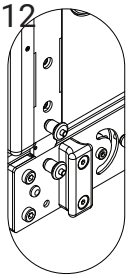

Position the array on the frame ensuring the holes are lined up.

13

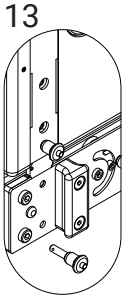

Replace the pins through the frame and the CORA-S array sub links.

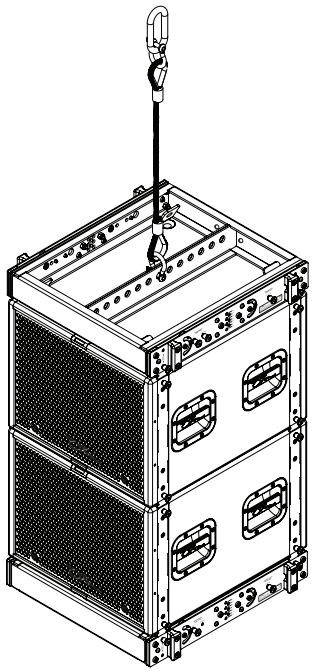

to add CORA/CORA-A array follow instructions from pages (16/17)

4.7. Ground Stacking the CORA Array

Some safety limitations must be considered when ground stacking the array.

When using the frame as a ground support a maximum of 8 x CORA/CORA-A array cabinets are allowed to be set up as a ground stack.

When using CORA-S as a ground support a combination of 8 x top/sub cabinets as a maximum are allowed to be used as a ground stack.

CORA-S columns can be constructed using up to a maximum of 6 x CORA-S in each column.

1

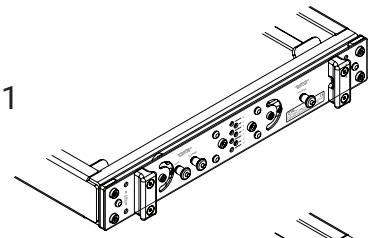

Lay frame in the ground stacking location.

2

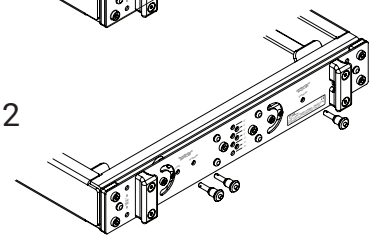

Remove the pins from the front link locking, front link storage and the rear splay link storage locations.

3

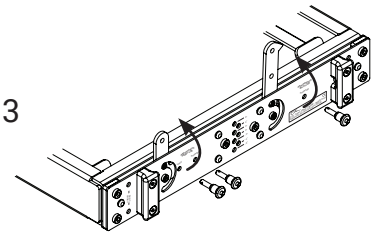

Rotate front link and splay link into the upright position. Replace pin into the front link locking position.

4

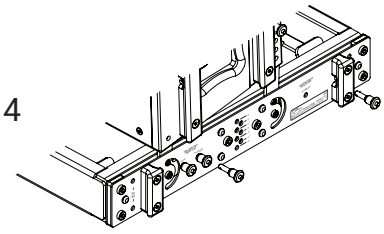

Place CORA line array cabinet onto the front link locating the bottom hole on the cabinet to the front link, replace the pin through the hole on the cabinet and the front link. Replace pin into the front link storage position.

5

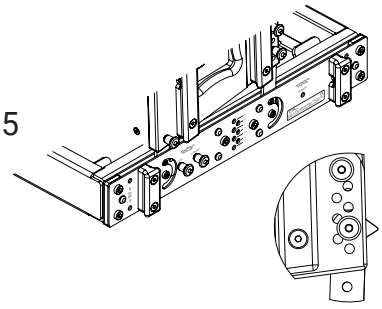

Using the desired hole on the rear splay as predicted via the pro-A-sync software lock into place using rear splay pin.

Continue adding cabinets until the desired array is complete.

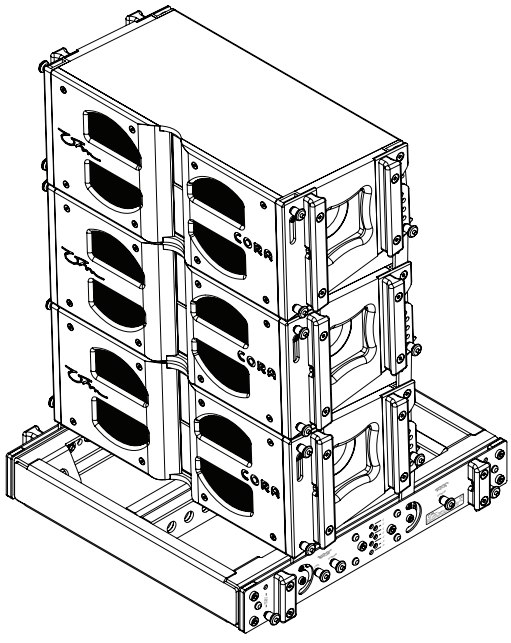

CORA/CORA-A cabinets in ground stack format.

NB: Maximum stack is either 8 CORA or 8 CORA-A.

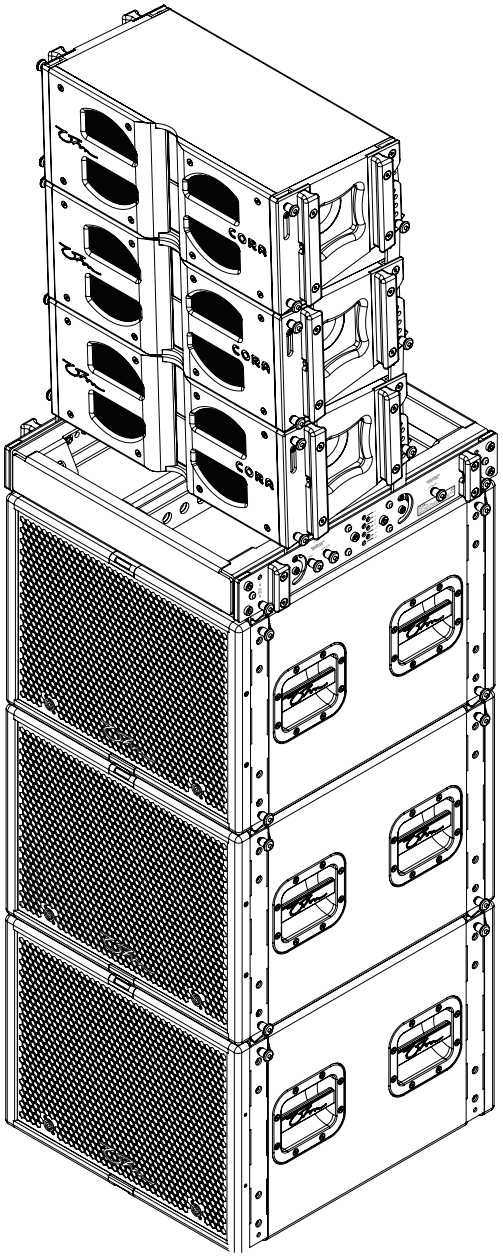

Mixed CORA or CORA-A and CORA-S cabinets in ground stack format.

NB: Maximum stack is 8 cabinets.

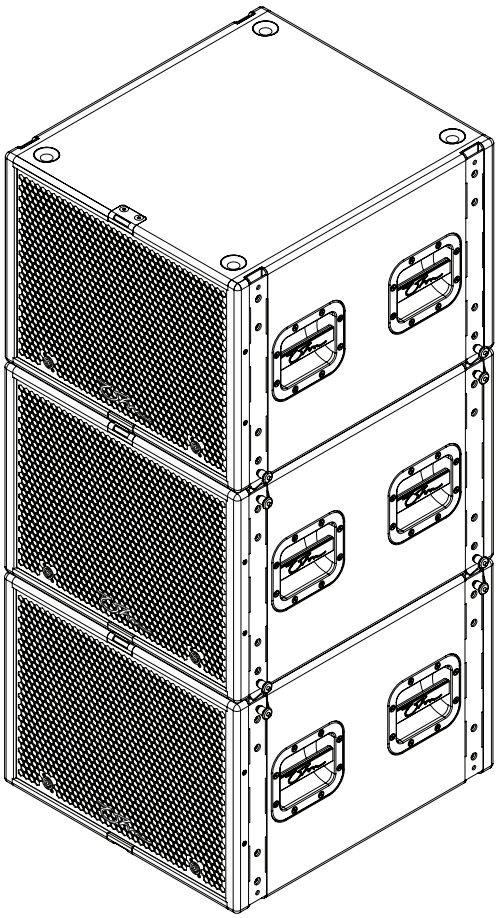

CORA-S cabinets in ground stack format.

NB: Maximum stack is 6 cabinets.

4.8. CORA Flightcases

Flightcases for CORA/CORA-A array are available to purchase from Ohm which allows for rapid deployment of the array. Each flightcase contains three CORA/CORA-A Array loudspeakers. With the lid removed from the case, the flying frame (once attached to a hoist) can be lowered onto the top of CORA/CORA-A and all three cabinets can be raised at once. Further cabinets can be attached and raised underneath using the same method.

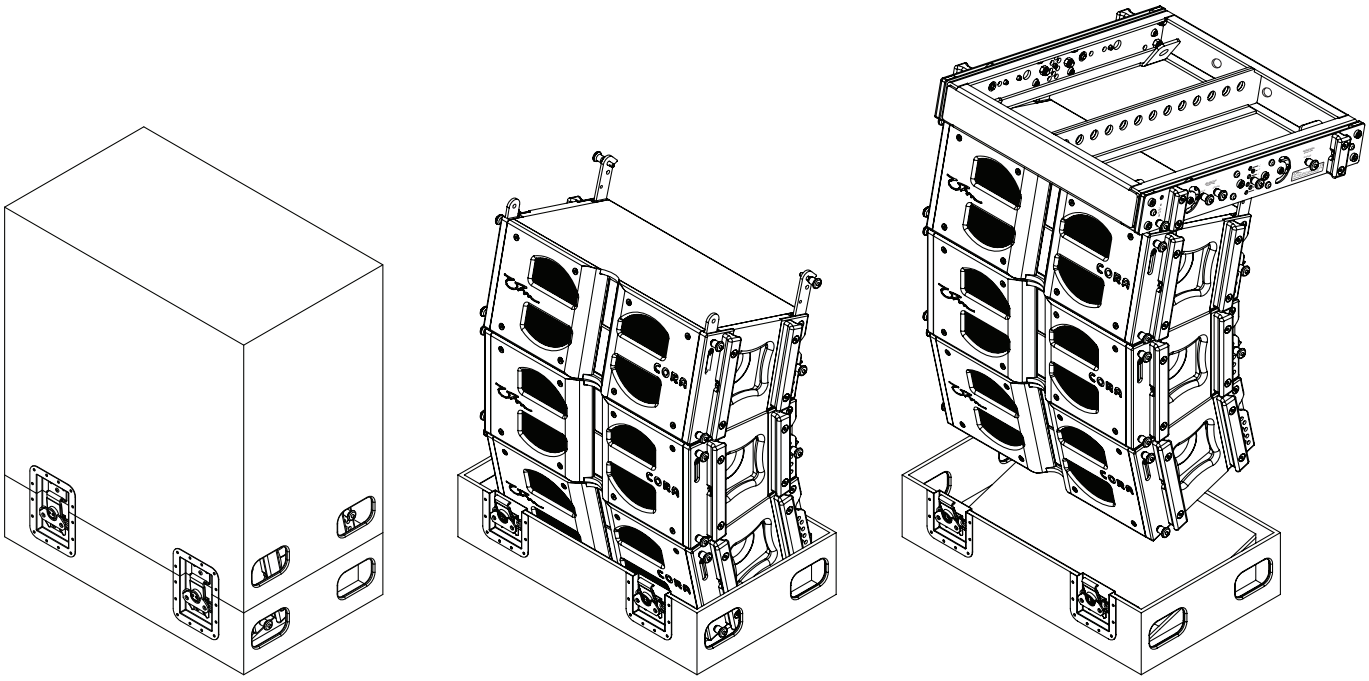

A flightcase is also available for the CORA Flying Array Frame which holds two array frames.

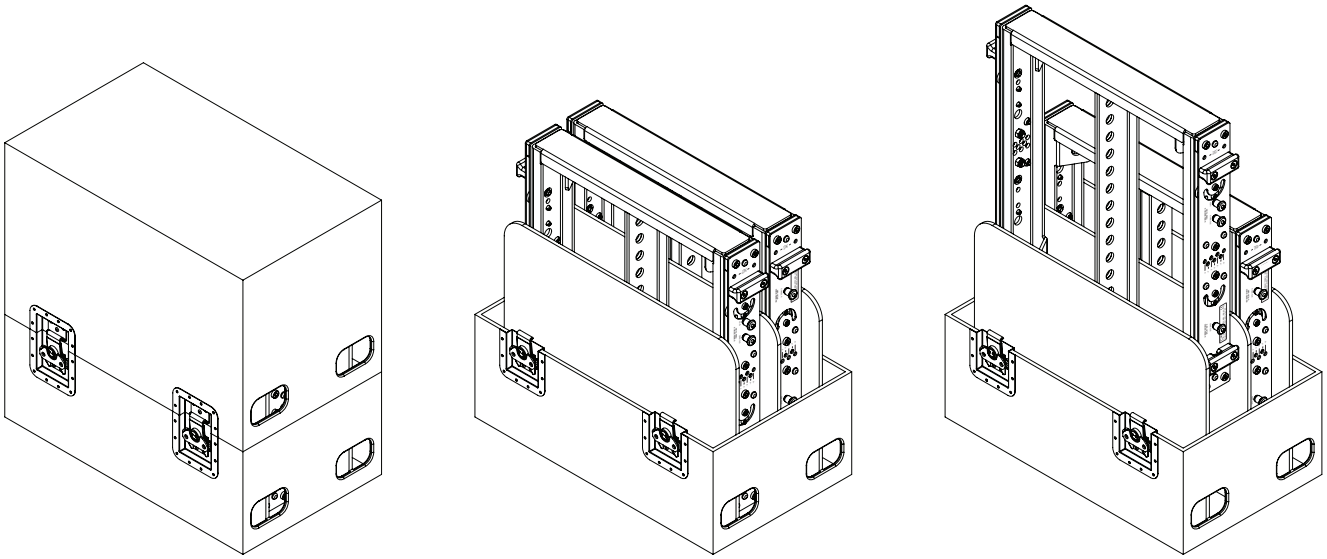

5. Safety Checks

Before the array is hoisted to its final trim height some safety checks should be made. These checks apply to either flown or ground stack configurations.

5.1. Mechanical Safety

Check the attachment of the hoist to the frame. Ensure shackles are tightened correctly.

Check the attachment of the secondary safety device on the frame and ensure shackles are tightened correctly.

Check the attachment of the flying frame to the cabinet below and ensure all locking pins are seated correctly and locked.

Check the attachment of all the front links on both sides of the cabinets and ensure all locking pins are seated correctly and locked.

Check the splay angles on the rear of all cabinets and ensure all locking pins are seated correctly and locked.

In “single pickpoint operation” check the desired vertical angle of the entire array by using an inclinometer attached to the frame.

5.2. System Wiring

Check that all cables on the back of the array are seated correctly and connected to the correct amplifier channels.

Check the cable pick on the frame is attached securely and all the cables are choked and supported by the frame so as to not put any undue stress on the connectors.

Up to two CORA-S may be connected in parallel per amplifier channel.

Up to two CORA (passive) array cabinets may be connected in parallel per amplifier channel.

CORA Active: Up to three x CORA-A (active) cabinets may be connected together with Neutrik powerCON® TRUE1 Connectors.

5.3. Signal Tests

Once the system is set up, wired and powered on, use a signal generator connected to a mixing console to check the status of each loudspeaker component in the array.

6. Flying the array

6.1. Hoisting the Array

Before the array is hoisted always pay attention to the following:

The hoists in use must be able to carry the total weight of the array.

When hoisting the array be aware of others in the vicinity of the load that are not directly involved in the hoisting process.

When working on outdoor events especially, weather conditions unpredictable dynamic forces and swinging of the array must be taken into account. Personal injury could occur and/or damage to the rigging and loudspeaker cabinets.

When all the necessary adjustments have been made and safety checks carried out the array can be hoisted to its final operating position (trim height).

Ensure that no loudspeaker cables coming from the array get caught, cables coming from the array should be strapped together while the system is hoisted.

Raise the array slowly and evenly and ensure that there is nobody direct underneath or in the vicinity of the load whilst it is being raised.

6.2. Making Safe at Height

Once the array is at its final trim height secure the secondary safety, (as described in chapter 3.6. Secondary Safety).

7. Derigging the array

7.1. General Information

To dismantle the array as described above please follow the assembly instructions in reverse order.

The same safety measures apply.

7.2. Flightcasing the Array

Remove all cabling from the back of the array.

Use a person on either side of the array to reset the splay links on the bottom two cabinets to 12°.

Lower the array slowly into the CORA flightcase until the front links on the cabinets are load free.

Remove the front link locking pins from the 3rd cabinet from the bottom of the array, slide the front links into the cabinet and locate the locking pins in the storage pin hole on either side.

Remove the rear splay link locking pins from either side of the cabinet above and rotate the splay links back into the 3rd cabinet.

Push the splay links into the cabinet and locate the locking pins in the storage position.

Replace the flightcase lid and repeat the process until all cabinets are cased.

8. Care and Maintenance

8.1. Visual Inspection

To eliminate the potential risk of accident due to malfunction, inspection checks must done on all components regularly.

Cabinets:

Visual inspection of all cabinet hardware for signs of obvious damage, cracks or corrosion.

Check all screws and fittings.

Check the components frequently using a signal generator and suitable amplifier.

Front and Rear (Splay) Links:

Visual inspection for cracks, corrosion or other damage.

Check drilled holes for deformation.

Locking Pins:

Check the operation of each pins release mechanism

Visual inspection for cracks, corrosion or other damage.

Regularly lubricate the Locking Pins using spray lubricant or light oil.

8.2. Transportation and Storage

During transportation ensure the rigging components are not stressed or damaged by mechanical forces outside of their specific operating conditions.

Use recommended flightcases to store CORA line array cabinets

Ensure cabinets are kept dry when being stored or transported.

9. Technical Specifications

9.1. CORA Array Cabinet

Design
2 x 8” Full range, phaseplug controlled coupling waveguide, side ported cabinet

Impedance
2 x 8 Ohm, minimum 7 ohms @ 321Hz LF / 7.5 ohms @ 600Hz HF

Power Handling (AES)
500 Watts LF / 160 Watts HF (continuous)

Max. Power Handling (AES)
1000W LF /320W HF (prog)
2000W LF / 640W HF (peak 10 ms)

Sensitivity 2.83V / 1m
102 dB LF / 115 dB HF

Max. SPL
129 dB cont. 135 dB peak LF
137 dB cont. 143 dB peak HF

Frequency Response (±3 dB)
82 Hz - 20 kHz

Usable Frequency Range (-10 dB)
75 Hz - 21 kHz

Dispersion
100° x 12° per cabinet, up to 100°x 90° depending on array curving

SYSTEM OPERATION

Recommended Amplification
2 x 2000 W @ 2.66 Ohm for 3 cabinets in parallel

System Controller
Ohm DSP solutions

Speaker Cables
Min - 4 x 2.5 mm^2
Preferred - 4 x 4 mm^2

PRODUCT FEATURES

Components
2 x 8” OHM driver on phaseplug coupler
2 x 4” Planar wave drive

Crossover
Passive - 1.15 kHz with dispersion control phase response
Active - * LPF - 1 kHz LF
HPF - 1.15 kHz HF /60 Hz Full range / 100Hz MH

Connectors
2 x 4 pole speakON® connectors

Dimensions (H x W x D mm)
250 x 576 x 300

Weight (kg)
21.7

Shipping Weight (kg)
23 (1 cabinet per carton)

Colour
Black

Options
-

Rigging
2 x flying hardware sides for hanging or ground stacking

HARDWARE

Fitted as Standard
CORA flying hardware

Optional
C-AF CORA array frame

Additional Descriptive Data
Birch plywood construction, with durable scratch resistant black polyurea paint finish with Ohm logo.

Recommended filter settings are available on the website ohm.co.uk/downloads

* All presets from the OHM library.

CORA Array Cabinet Drawing

Front

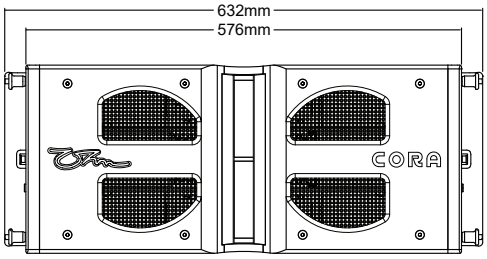

Side

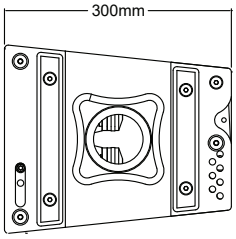

Back

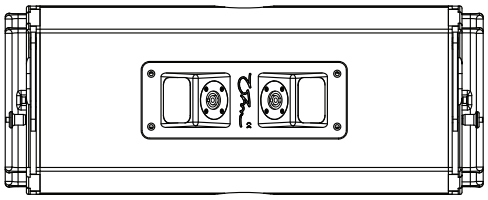

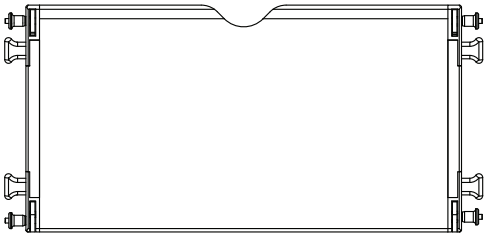

Bottom

Top

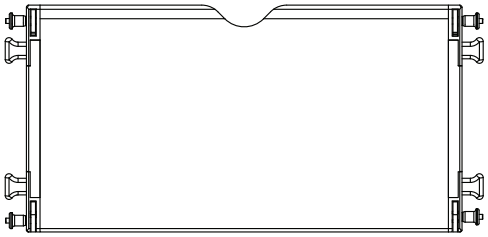

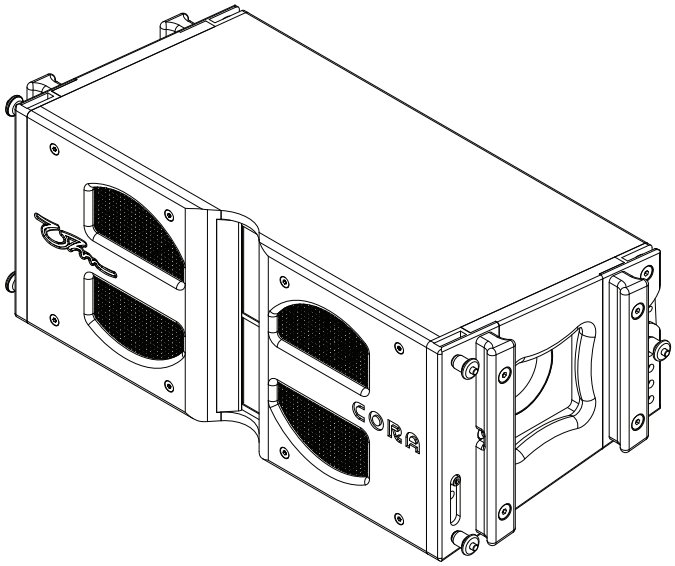

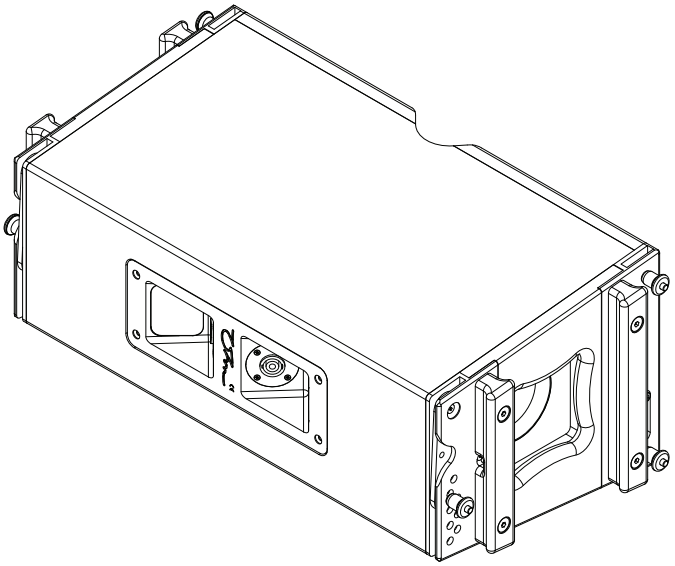

9.2. CORA-A Array Cabinet

Design
Active line array with integrated FIR-DSP,
2 x 8 " Mid-bass units phaseplug coupled to a common waveguide with 2 x 4" Mid-high planar wave drivers

Internal Power Amps
1000w +1000w

Internal DSP
Full FIR-DSP with linear phase crossover and linear phase loudspeaker equalization

Sensitivity Chassis 1w/1m
102 dB LF / 115 dB HF

Max. SPL
135 dB cont. / 143 dB peak (frequency dependent)

Frequency Response (±3 dB)
82 Hz - 20 kHz

Usable Frequency Range (-10 dB)
75 Hz - 21 kHz

Dispersion
100 x 12°

SYSTEM OPERATION

System Controller
Ohm DSP solutions

Input connection
Balanced XLR input, 10 K ohm Impedance with parallel link output

Protection
Internal multiband peak and RMS limiter, thermal limiter and protection on amplifier

PRODUCT FEATURES

Components
2 x 8" OHM driver on phaseplug coupler
2 x 4" Planar wave drive

Crossover
1.15 kHz FIR filter

Connectors
1 x XLR female, 1 x XLR male and 1 x powerCON® TRUE1 connector.

Dimensions (H x W x D mm)
250 x 576 x 300

Weight (kg)
22.4

Shipping Weight (kg)
24.3 (1 cabinet per carton)

Colour
Black

Options
-

Rigging
2 x flying hardware sides for hanging or ground stacking

HARDWARE

Fitted as Standard
CORA flying hardware

Optional
C-AF CORA array frame

Additional Descriptive Data
Birch plywood construction, with durable scratch resistant black polyurea paint finish with Ohm logo.

Recommended filter settings are available on the website ohm.co.uk/downloads

* All presets from the OHM library.

CORA-A Array Cabinet Drawing

Front

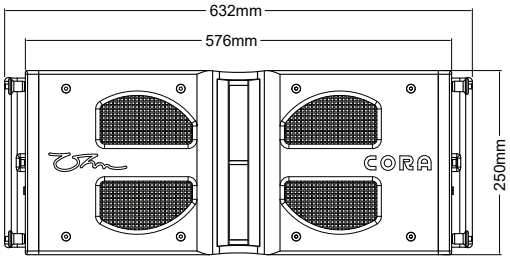

Side

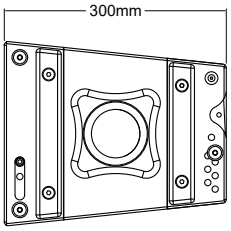

Back

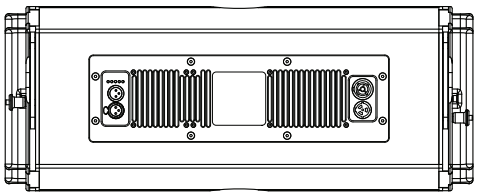

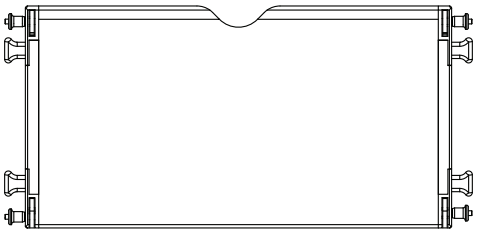

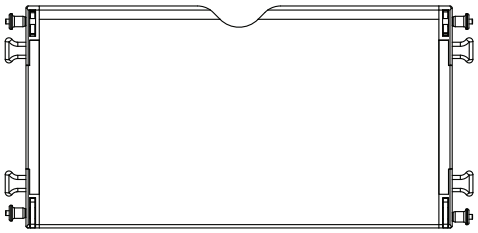

Bottom

Top

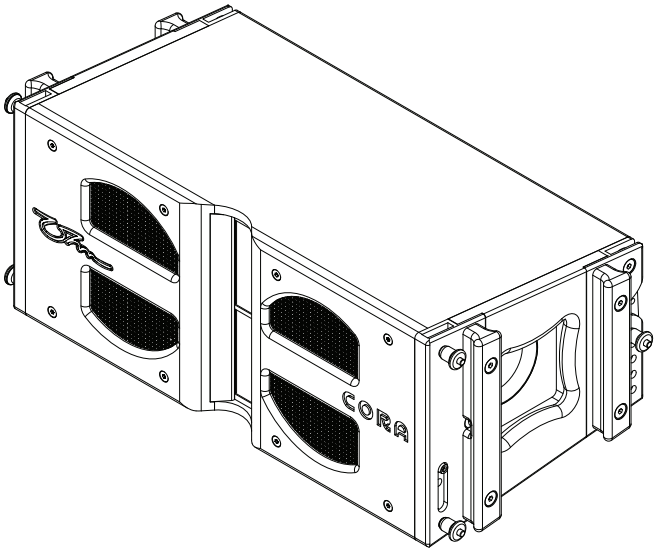

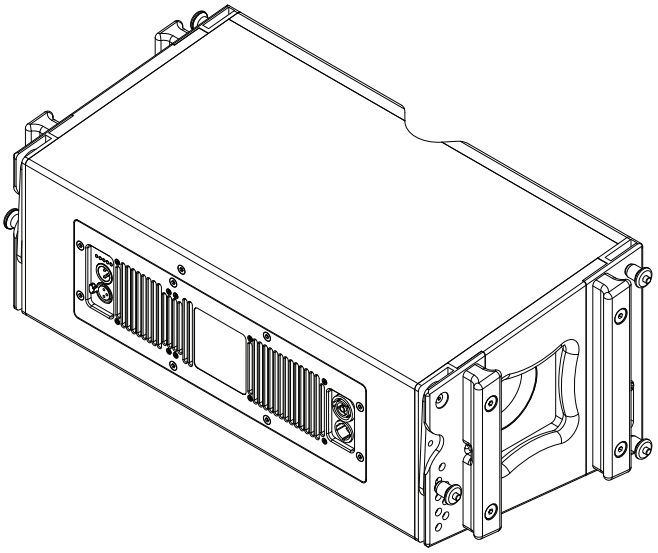

9.3. CORA-S Cabinet

Design
1 x 15” Subwoofer, reflex loaded subwoofer

Impedance
8 Ohm, minimum 6.6 @ 146 Hz

Power Handling (AES)
850 Watts (continuous)

Max. Power Handling (AES)
1700 Watts (program)
3400 Watts (peak 10 ms)

Sensitivity 2.83V / 1m
97 dB

Max. SPL
126 dB cont
132 dB peak

Frequency Response (±3 dB)
35 Hz - 250 Hz

Usable Frequency Range (-10 dB)
30 Hz - 300 Hz

Dispersion
Omni

SYSTEM OPERATION

Recommended Amplification
800 - 2000 Watts

System Controller
Ohm DSP solutions

Speaker Cables
Min - 2 x 4 mm^2
Preferred - 2 x 6 mm^2

PRODUCT FEATURES

Components
1 x 15” Low frequency driver

Crossover
Passive - -
Active - * LPF - 110 Hz
HPF - 29 Hz

Connectors
4 x 4 pole speakON® connectors

Dimensions (H x W x D mm)
440 x 572 x 630

Weight (kg)
39.8

Shipping Weight (kg)
41.3 (1 cabinet per carton)

Colour
Black

Options
-

Rigging
Foot and cup stacking system, CORA flying system

HARDWARE

Fitted as Standard
CORA-S flying hardware, ergonomic carry handles

Optional
CORA-S dolly board, C-AF CORA array frame

Additional Descriptive Data
Birch plywood construction, with durable scratch resistant black textured polyurea paint finish, kick-proof steel grill and internal black foam with Ohm logo.

Recommended filter settings are available on the website ohm.co.uk/downloads

* All presets from the OHM library.

CORA-S Cabinet Drawing

Front

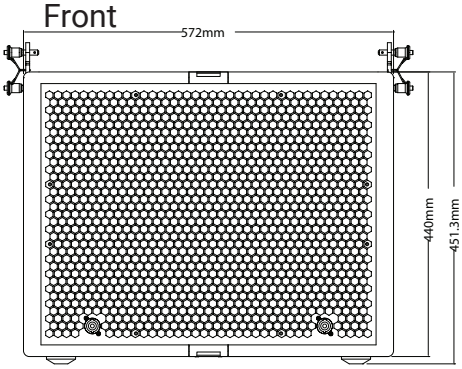

Side

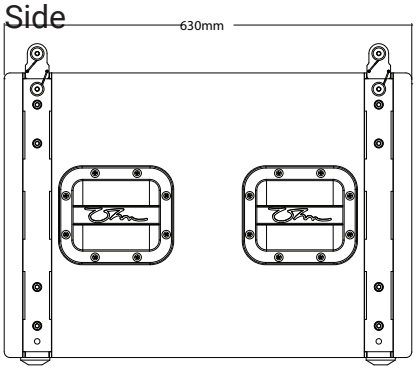

Back

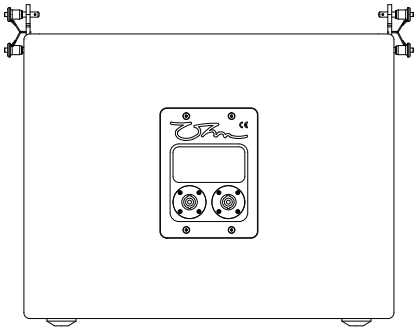

Bottom

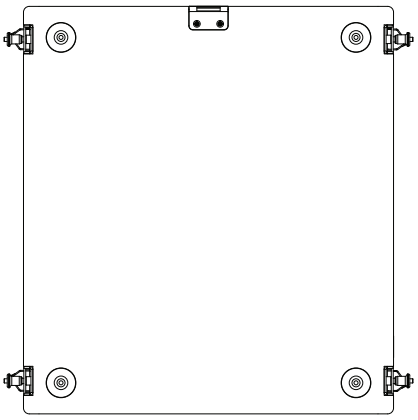

Top

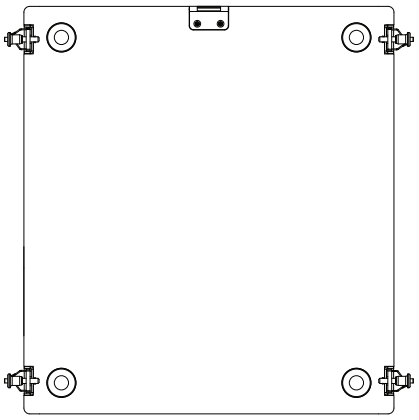

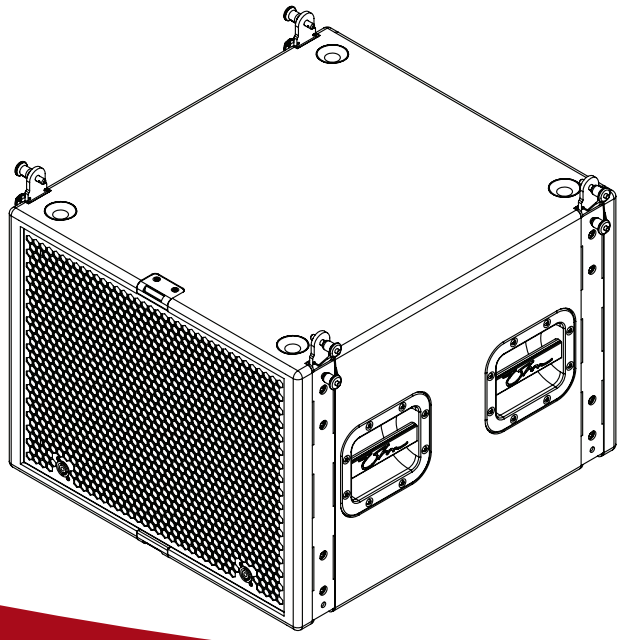

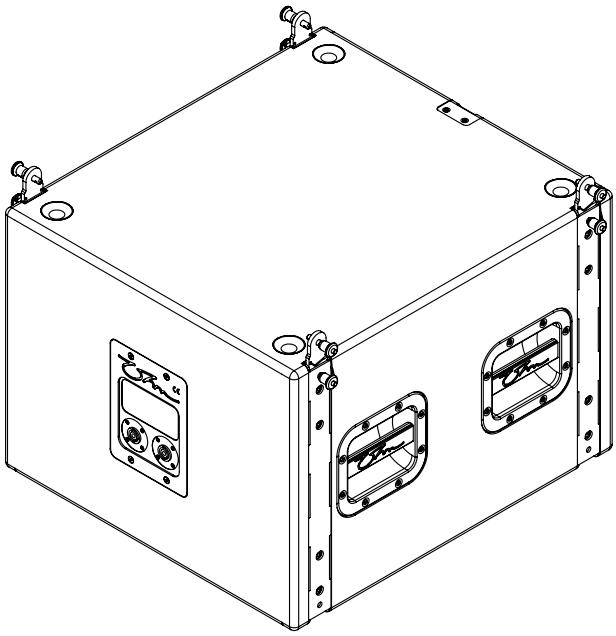

10. Manufacturers Declaration

Aural Ltd. (Ohm) hereby declare that the equipment described below is designed, built and sold by us in such a way as to comply with the relevant fundamental safety and health criteria of the applicable EC Directive(s). This declaration shall cease to be valid if alterations are made to the equipment without our prior agreement.

This declaration includes:

CORA array loudspeaker cabinets including rigging:

CORA-A (CORA Active)

CORA (CORA Passive bi-amp)

CORA-S

CORA array rigging components:

C-AF (CORA Array Frame)

International Standards and technical specifications applied:

DIN EN 1050

BGV C1

Date: 15-06-2018

Krishna Hedge

Director

Aural Ltd. – (Ohm)

aural ltd
Wellington Close • Parkgate Industrial Estate • Knutsford •Cheshire • WA16 8XL • United Kingdom • Tel: +44 (0)1565 654641
Email: info@ohm.co.uk • Website: www.ohm.co.uk